ZR 15

Technical data

Type	Ratio i	2800 n2 (min1)		1400 n2 (min1)		900 n2 (min1)		700 n2 (min1)		RD	Kg
		M2 [Nm]	P1 (kW)	M2 [Nm]	P1 (kW)	M2 [Nm]	P1 (kW)	M2 [Nm]	P1 (kW)		
ZR 15	1	7.7	2.5	8.6	1.3	9.2	1.0	10	0.67	0.97	1.2
	2	—	—	4.2	0.65	4.5	0.50	5	0.33	0.97	

Dimensions

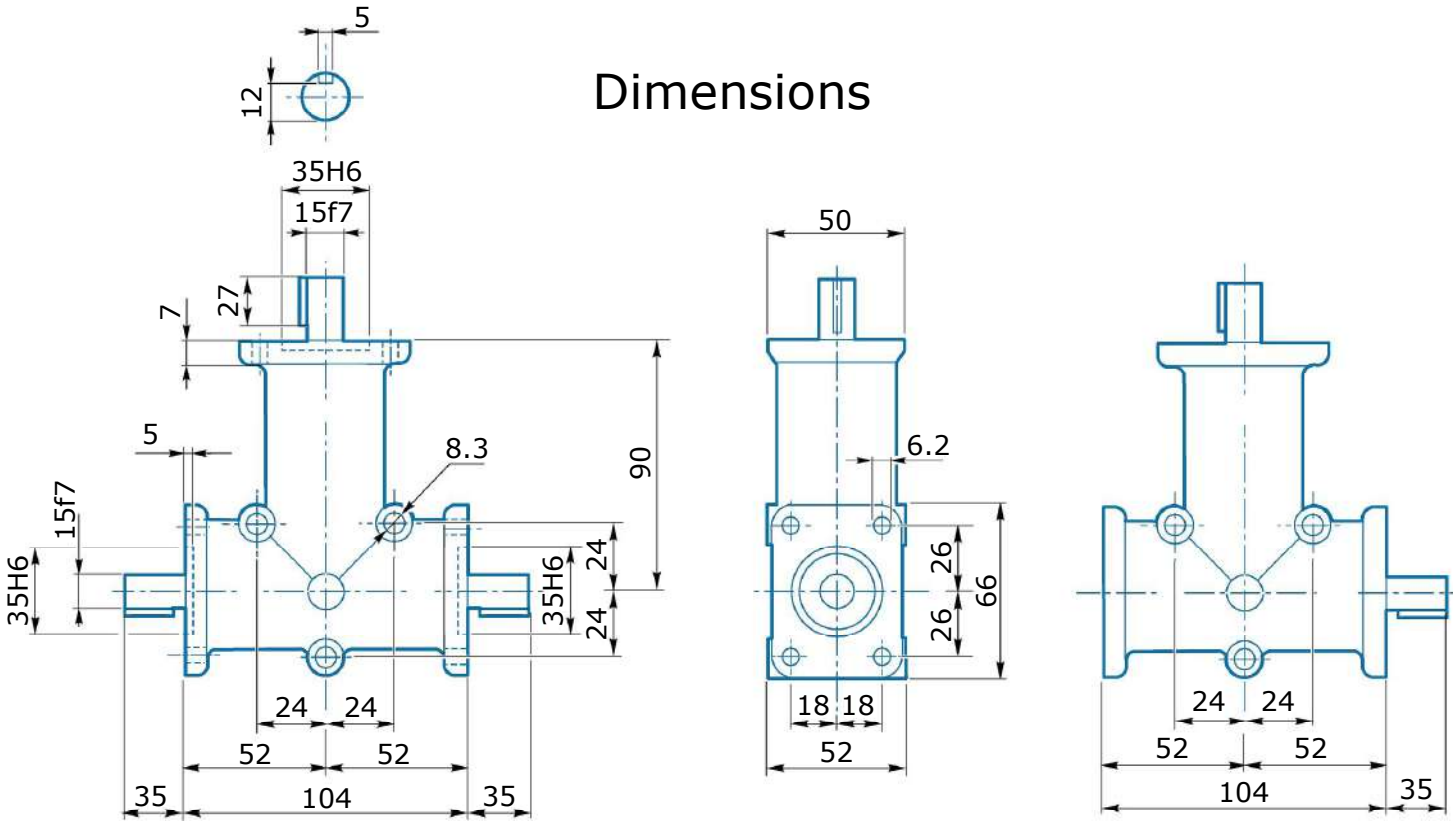

ZR 15 T

ZR 15 LA/LB

Shafts position and direction of rotation

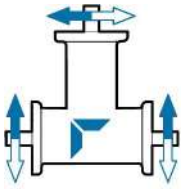

T

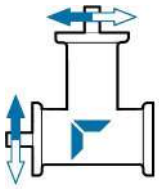

LA

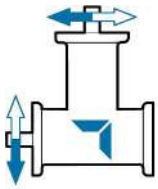

LB